FAX30 Dimensional Drawings
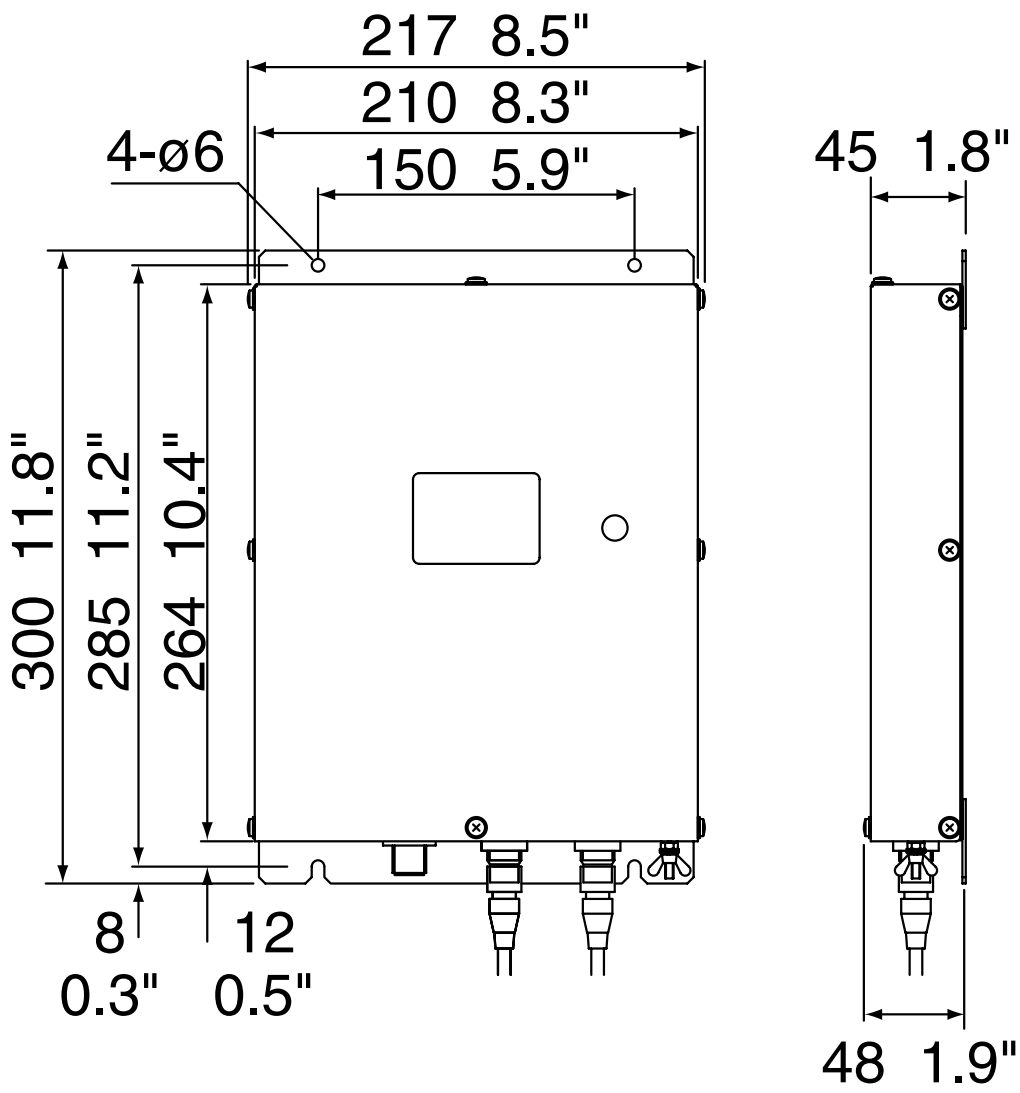
FAX30 Receiver Unit 2.0 kg 4.4 lb