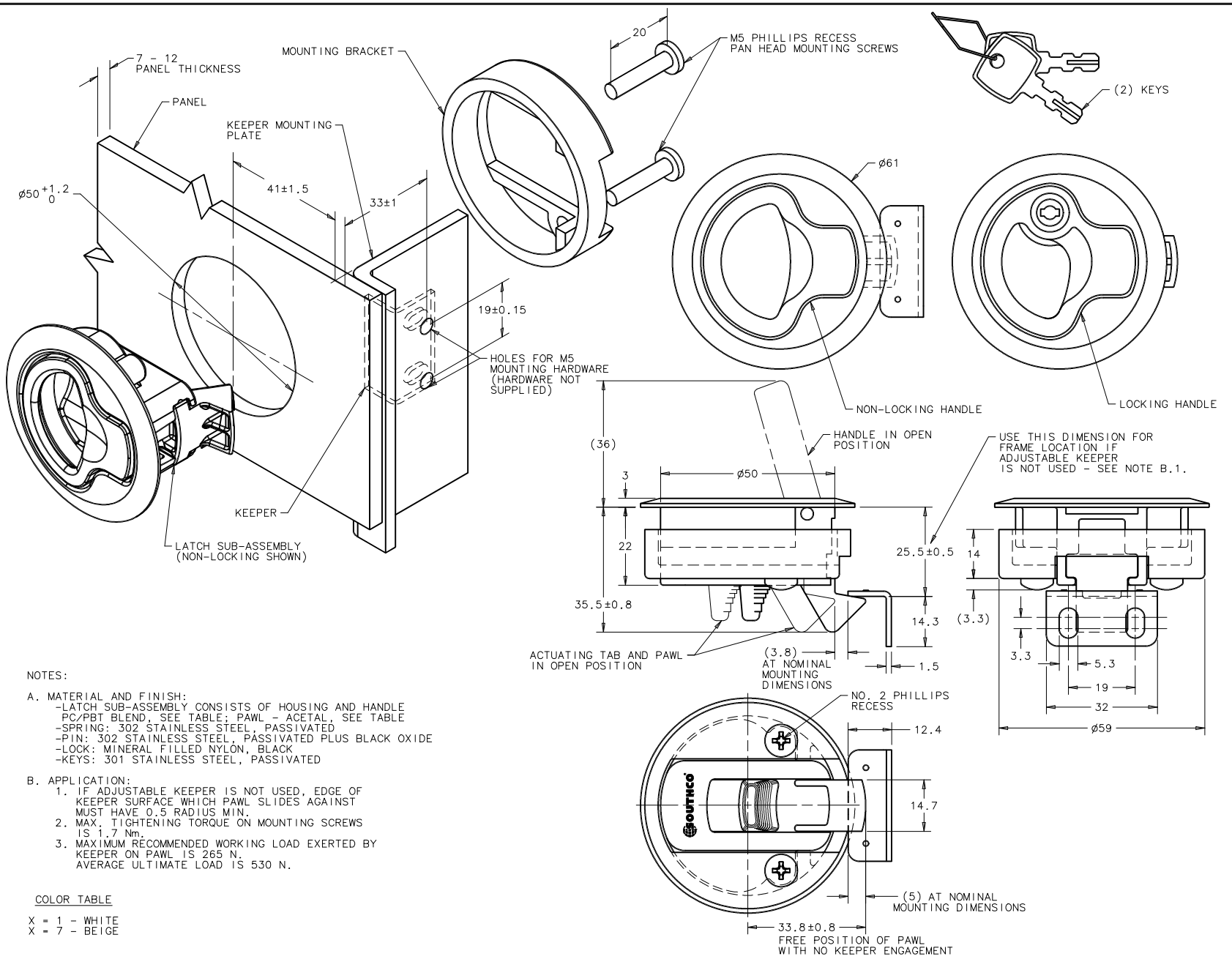

NOTES:

A. MATERIAL AND FINISH:
- -LATCH SUB-ASSEMBLY CONSISTS OF HOUSING AND HANDLE PC/PBT BLEND, SEE TABLE; PAWL - ACETAL, SEE TABLE
- -SPRING: 302 STAINLESS STEEL, PASSIVATED
- -PIN: 302 STAINLESS STEEL, PASSIVATED PLUS BLACK OXIDE
- -LOCK: MINERAL FILLED NYLON, BLACK
- -KEYS: 301 STAINLESS STEEL, PASSIVATED

B. APPLICATION:
1. IF ADJUSTABLE KEEPER IS NOT USED, EDGE OF KEEPER SURFACE WHICH PAWL SLIDES AGAINST MUST HAVE 0.5 RADIUS MIN.
2. MAX. TIGHTENING TORQUE ON MOUNTING SCREWS IS 1.7 Nm.
3. MAXIMUM RECOMMENDED WORKING LOAD EXERTED BY KEEPER ON PAWL IS 265 N. AVERAGE ULTIMATE LOAD IS 530 N.

COLOR TABLE

X = 1 - WHITE
X = 7 - BEIGE

ITEM	PART NUMBER	MATERIAL	FINISH	REMARKS
ASSEMBLY	M1-42-X	SEE NOTE A	SEE NOTE A	LOCKABLE
ASSEMBLY	M1-62-X	SEE NOTE A	SEE NOTE A	NON-LOCKING
LATCH SUB-ASSEMBLY		PC/PBT BLEND	SEE COLOR TABLE	
MOUNTING BRACKET		304 STAINLESS STEEL	PASSIVATED	
KEEPER		300 SERIES STAINLESS STEEL	PASSIVATED	
MOUNTING SCREWS (2)				

REV.	DATE	DRAWN	REVISION
H	05DEC2002	RLR/DLH	PRN: P2002-0935
I	19APR2004	MDY/AJH	PRN: P2004-0402

southco

PROPRIETARY ITEM - EXCEPT FOR USES EXPRESSLY GRANTED IN WRITING INFORMATION DISCLOSED HEREON IS CONFIDENTIAL AND ALL RIGHTS PATENT AND OTHERWISE ARE RESERVED BY SOUTHCO, INC.

SOUTHCO FLUSH-PULL™ LATCH METRIC ASSEMBLY

DATE	DRAWN	CHKD	SCALE
31AUG92	JGK		1 : 1

DRAWING NUMBER: J-M1-62-1

MILLIMETER

DIMENSIONAL TOLERANCE UNLESS OTHERWISE NOTED ±0.25

THIRD ANGLE PROJECTION

A3 PAPER SIZE